DOP

Dop represents our ceiling lamp collection, attaching directly to the ceiling without any visible screws or fasteners,with a very clean and minimalist design.

The Dop collection maintains the same elegant shapes and proportions as our pendant light collection, while being more adapted for spaces with low ceilings.

Their different sizes have the intent of complementing each other allowing for compositions and complex arrangements.

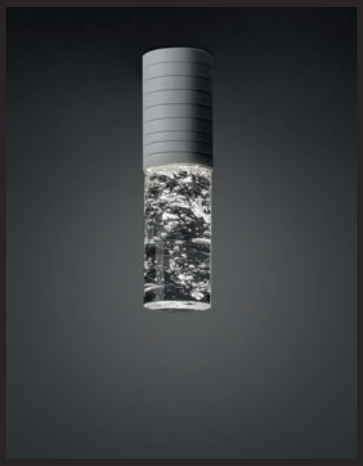

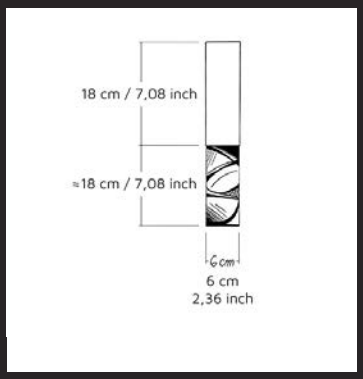

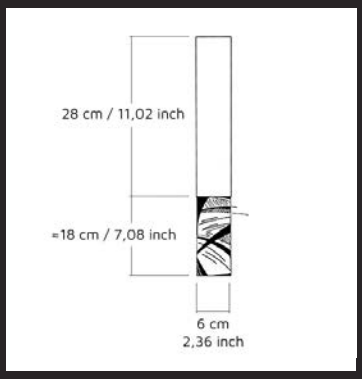

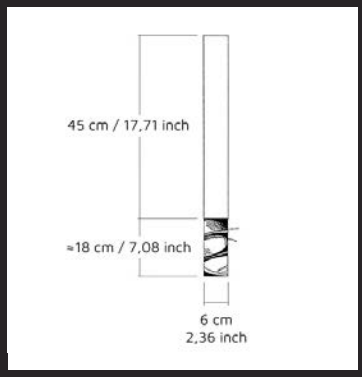

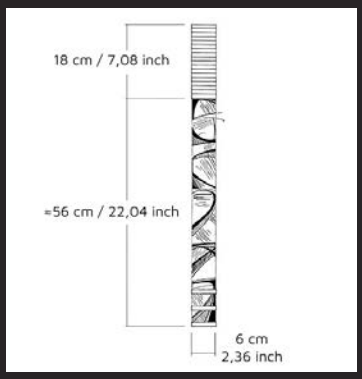

Technical Details:

Cod. Led Opoggio-DDS1223

100-240V
Power Frequency
PWM - 300-10000 Hz (recommended 3000 Hz)
24 Vdc - 4W 500 Lumen

Dimmable power PWM

Extra warm light (2700 K)
Warm light (3000 K)
Natural light (4000 K)

Light temperature is Fixed

US VERSION AVAILABLE

Available finishes:

- Matte white – made out of brass
- Matte black – made out of brass
- Aged/patinated brass
- Aged/patinated copper
- Other colors available on request

info@opoggio.com
www.opoggio.com